1	TX-O-04	2
2	TX-H-03	1
3	TX-E-54	1
4	TX-E-24	1
5	TX-M-33	1
6	TX-C-03	1
7	M8 Nut	1
8	M5x55L(modify)	2
9	TX-E-25	1
10	M5x55L	2

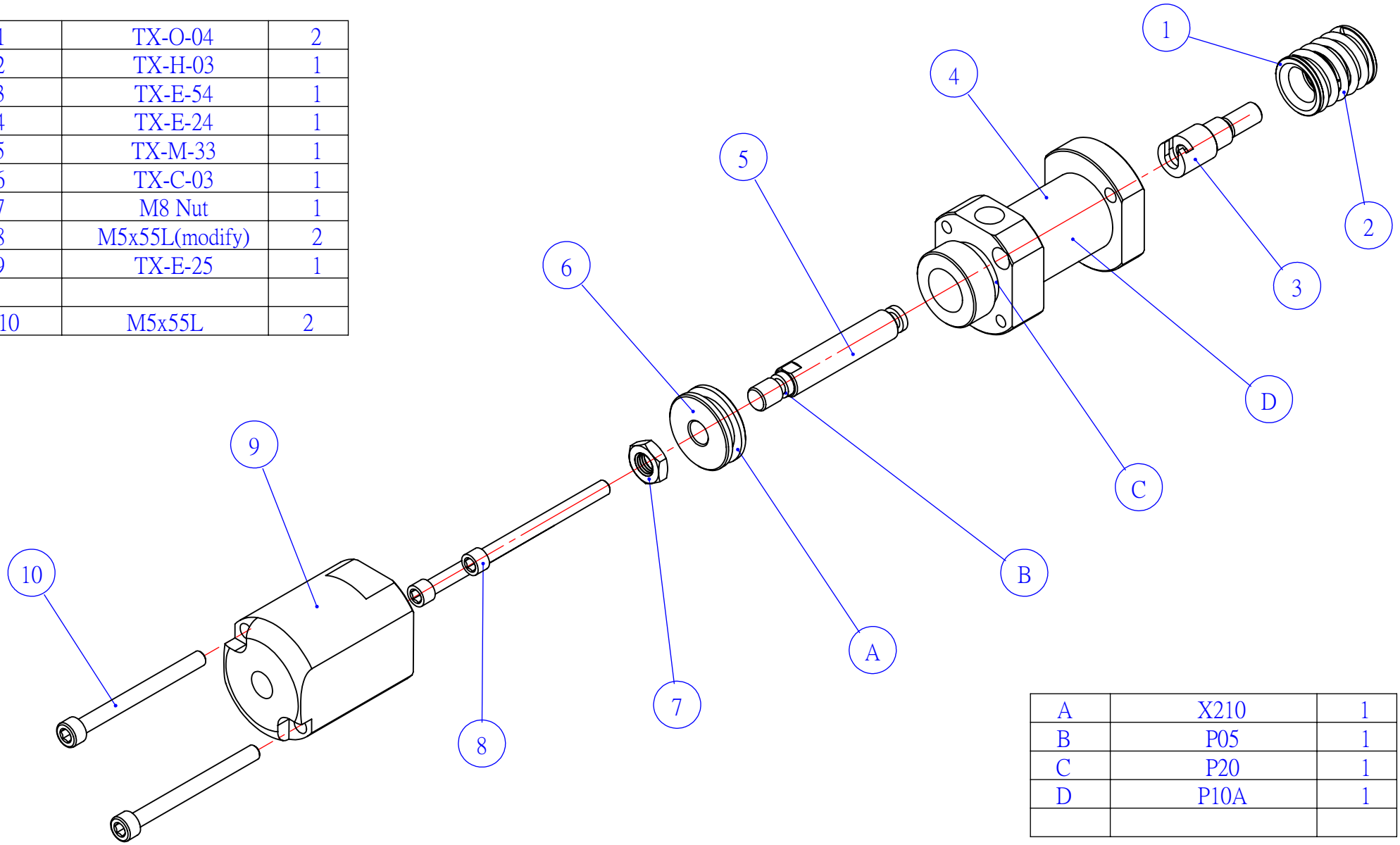

A	X210	1
B	P05	1
C	P20	1
D	P10A	1

4				General tolerance		Designer	Kent	Date	2011/09/28	Material		Valve type	
3				Dimension	Tolerance	Drawer	Kent	Date	2011/09/28	Machining		Description	
2				1-4	±0.05	Collator	Ray	Date	2011/09/28	Finish		Drawing NO.	
1				4-16	±0.07					Revision			Unit mm
Item	Description of change	Name	Date	16-63	±0.1	RECOVERY AND WINCH				Remark			Scale
				63-250	±0.2								
				250-1000	±0.3								