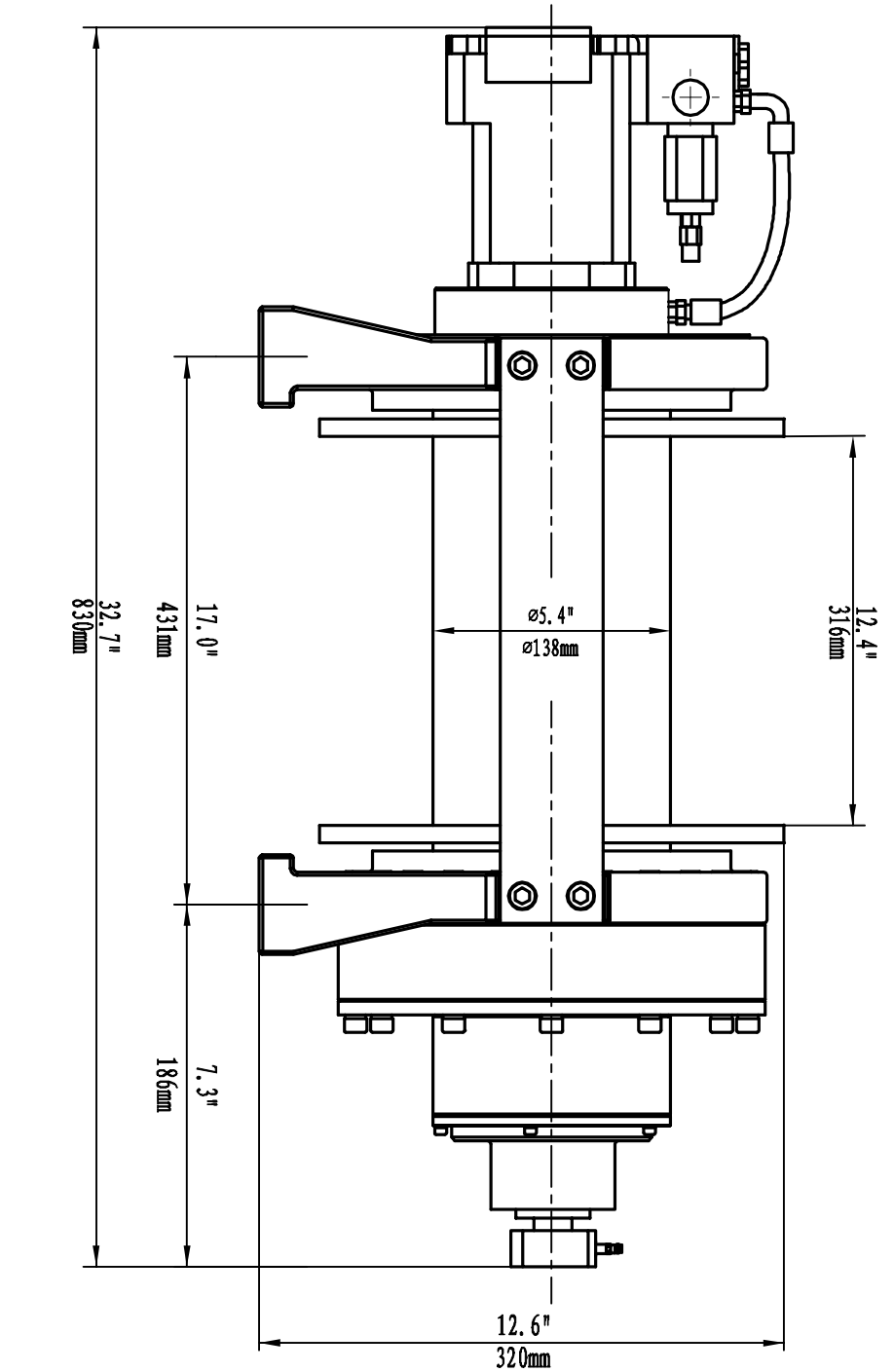
32.7"
830mm
17.0"
431mm
7.3"
186mm
ø5.4"
ø138mm
12.4"
316mm
12.6"
320mm

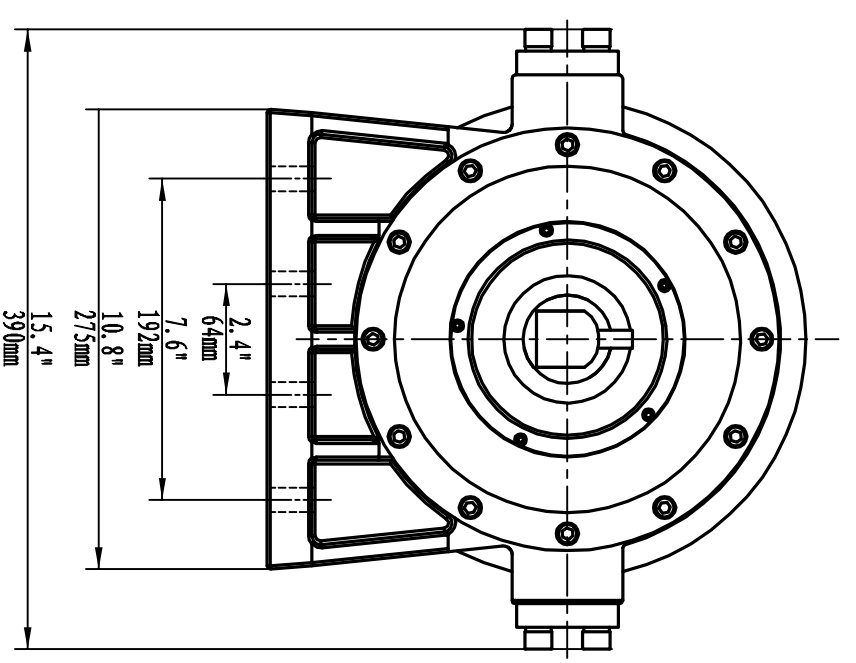
15.4"
390mm
10.8"
275mm
7.6"
192mm
2.4"
64mm